Better homes for
better living.
AIS
Windows
uPVC, Wood, Aluminium

AIS | Windows
uPVC, Wood, Aluminium

Can homes be built to enhance our lives?

Home is our place of Zen. It is an environment where we feel safe, happy, and at peace. To create that ideal space, one should ask many questions.

- Can a home be more than just a comfortable space?
- Can we make best use of sunlight, and at the same time keep harmful UV radiation out?
- Is there a simpler, smarter way to cut down electricity bills and be more eco-conscious?
- Can we live in a home that is noise-free?
- How can we optimize ventilation, and at the same time keep our home dust-free?

The answer to all this and more is, the right combination of glass products and window frames.

At AIS Windows, this is exactly what we offer you. Our end-to-end solutions will truly transform your space and protect you from noise, dust, rain, and rising energy costs. By combining the right glass product with the best profiles and hardware fittings, we deliver comprehensive solutions without compromising on your aesthetics or performance expectations.

Our service. Your advantage.

At AIS Windows, we offer end-to-end services – right from consultation, and glass & frame selection, to easy and hassle-free installation. Our trained technicians will be with you at every step of the installation process.

AIS | Windows

uPVC, Wood, Aluminium

Design thinking solutions

As a part of AIS, we have sufficient knowledge and expertise in glass to design a space that will stand out in style.

Solutions

We combine high-performance glass products with world-class door and window profiles to deliver various functional benefits.

- Energy-efficiency
- Acoustics
- Burglar-resistance
- Privacy and safety solutions
- Dust protection

Durability

- All-weather-resistant
- Impact-resistant
- Dust and smog-resistant
- Maintenance-free
- Long lasting

World-class quality

- Our products adhere to European standards – EN12608 and SKZ Germany
- Lead-free
- State-of-the-art manufacturing facilities

Range of Choices

- Unrivalled array of glass products
- Variety of profile styles
- Various elegant shades of profiles

Superior service

- Highly-trained technicians
- Flexibility to customize

How to brighten up your home, without raising the temperature?

Traditional door and window systems let the sun's light as well as its heat inside. This increases the room temperature, leading to higher usage of air conditioners. Energy-efficient solutions from AIS Windows can give you protection from outside heat as compared to other window systems leading to savings in electricity bills.

Engineered using high-performance solar- and thermal-control glass products, energy-efficient solutions from AIS reduce the heat gain from the outside, thereby enabling effective and efficient functioning of air-conditioning systems. In colder climates, it prevents inside heat from getting out, thus keeping the interiors warm, comfortable, and truly energy-efficient.

Benefits:

- Reduces the need for air-conditioning during summer and artificial heating during winter
- Reduces the need for artificial lighting during the day
- Lowers electricity consumption and saves up to 35%–40% of your electricity bills

AIS | Windows
uPVC, Wood, Aluminium

Calm and peaceful indoors

Today, it is very difficult to find a place where you can sit at ease and enjoy peace and tranquillity. Our urban spaces are filled with annoying noises that adversely affect our health.

Noise-cancelling solutions from AIS Windows let you reduce up to 42 decibels – that is up to 94% of external noise – creating a peaceful ambience for you to relax. Combining AIS Acousticglas™, our noise-cancelling product, with the inherent features of fusion-welded and double-sealed mechanisms, gives you excellent sound insulation, enabling you to only give ear to the things that matter the most.

Benefits:

- Features a speciailized PVB interlayer that dampens external sound
- Enhanced parameters for improved performance
- Extremely durable
- Superior aesthetics

When it comes to safety don’t compromise

Home is a place where you feel the safest. But there are instances when you need to protect your family from damages inside the house. A glass window is one such instance that is usually considered a potential cause of injury, if damaged. But our superior safety solutions include glass window products that are several times stronger and more durable than ordinary glass windows. Even in case of breakage, the glass in our windows disintegrates into minute granules, and precludes the possibility of serious injury. So you can rest assured that your home is safe and secure.

Benefits:

- Uses AIS Stronglas, a high-quality tempered glass for windows, that is several times stronger than ordinary glass
- In the unlikely case of breakage, the glass shatters into minute carbon granules instead of sharp shards
- Prevents injuries

AIS | Windows

uPVC, Wood, Aluminium

Glass can protect your home from heat, dust, and noise. And even burglars.

Security solutions from AIS Windows can be used to protect your home from accidental and deliberate damage in many ways, while enabling attractive designs.

Innovations in glass mean, doors and windows can now protect your family from break-ins. Our solutions include AIS Securityglas and AIS Securityplus multipoint locking systems. Together they provide enhanced security and absolute peace of mind.

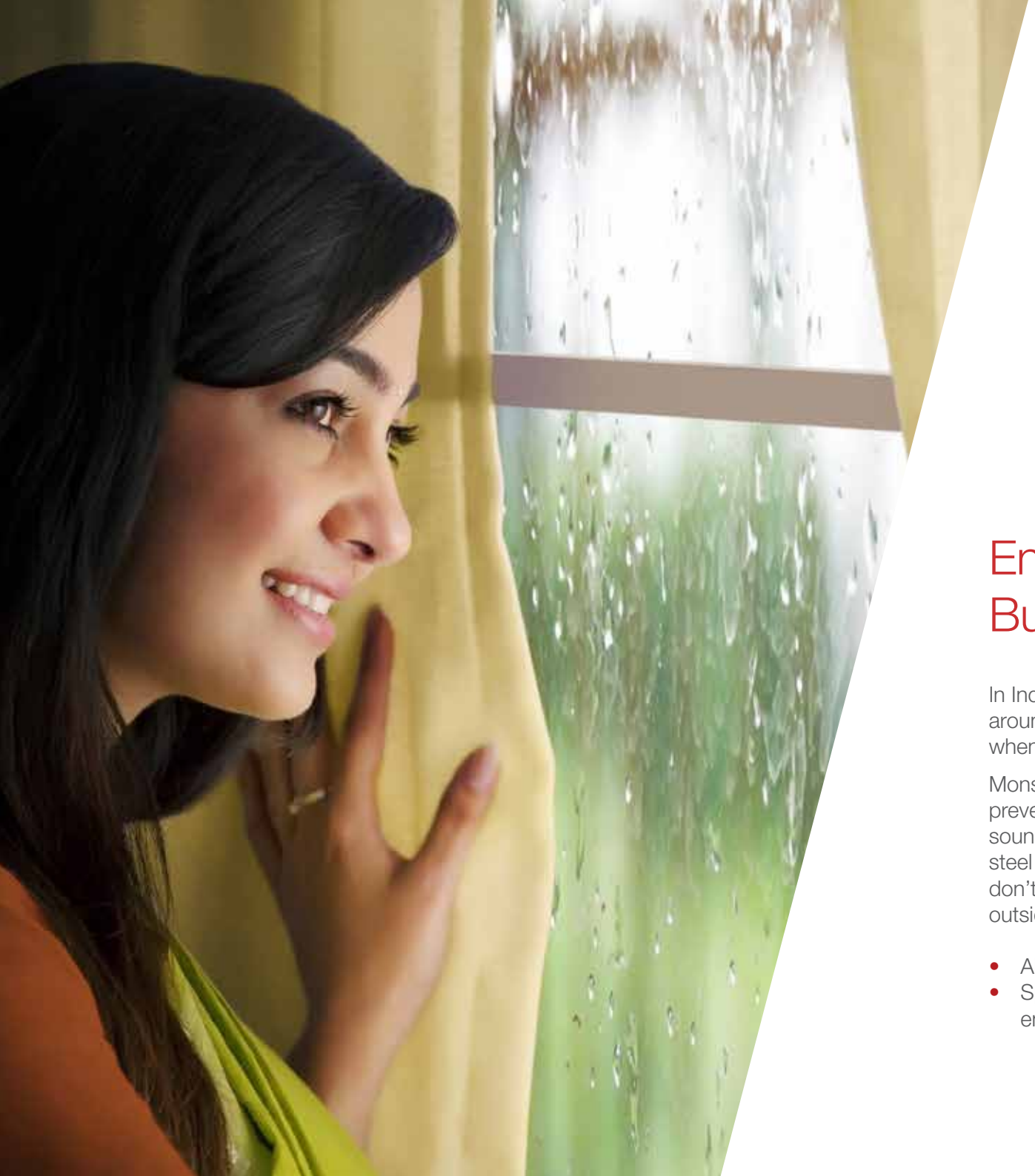

Enjoy the monsoon.
But let it stay out.

In India, the monsoon season is a great relief. Everything around is greener and livelier. But it becomes a nuisance when the rain seeps inside our house through the windows.

Monsoon-proof windows from AIS are impervious to water, preventing rainwater seepage and annoying whistling sounds caused by strong winds. The EPDM gaskets and steel reinforcements make sure the windows and doors don't rattle in gusty winds and heavy rains. The rains stay outside – you stay warm and cosy inside.

- Airtight and waterproof profiles
- Specialized locking system prevents rainwater from entering the interiors

AIS | Windows

uPVC, Wood, Aluminium

Your wish is our command

Design your home the way you would love to, with customizable solutions from AIS. You can explore the wide portfolio of high-performance glass products from AIS and create your own unique, customizable solutions from AIS Windows. We have a variety of door and window profiles, sizes, colours, and designs to choose from, and the perfect hardware and locking systems to suit your requirement. Our experts are always there to guide you all the way, as you give a personal touch to your home.

The uPVC Mechanism

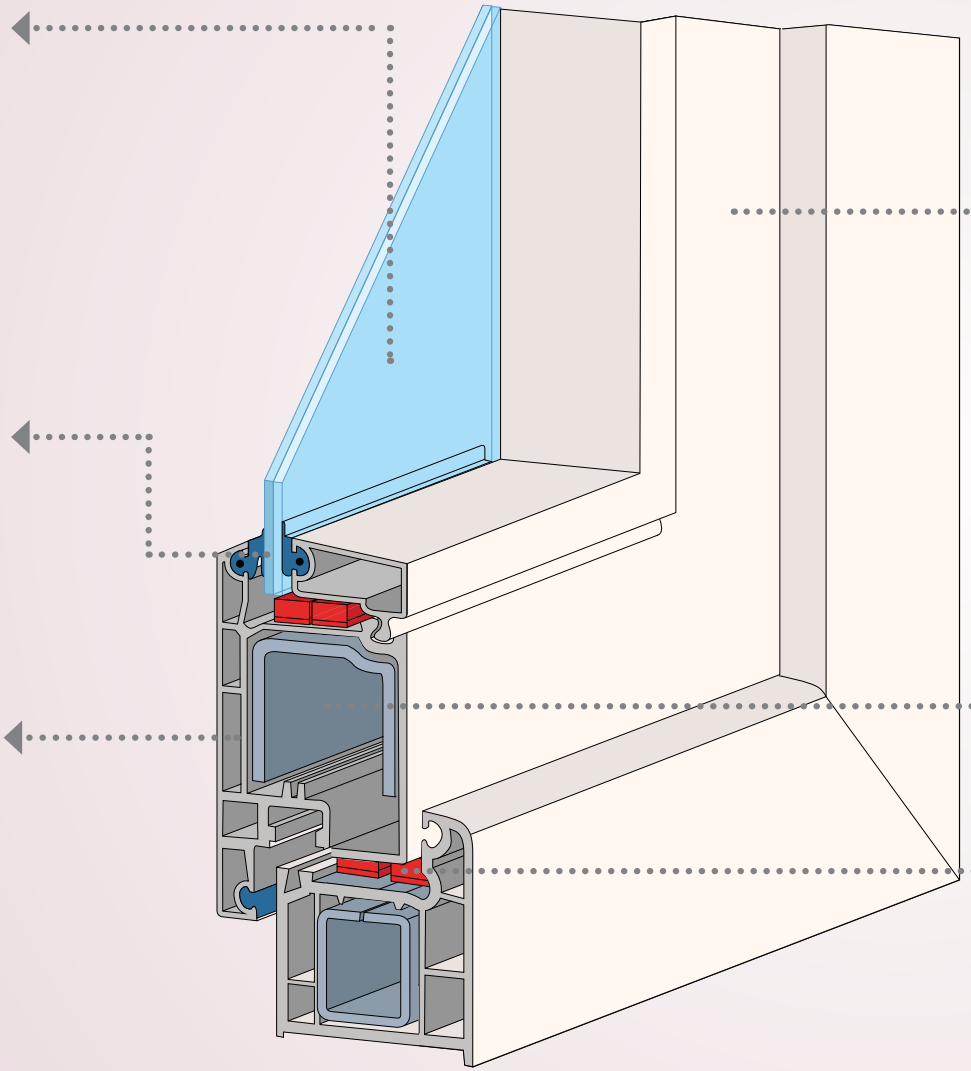

AIS | Windows
uPVC, Wood, Aluminium

Get the uPVC advantage with AIS Windows

Thermal insulation: Vinyl windows are excellent, all-weather heat insulators

Insulated frames: Double-sealed mechanism and EPDM gasket act as a shield against dust and rain, and reduce air infiltration

Acoustic insulation: Provides insulation against noise

Maintenance-free: No painting required; easy to clean and operate

Aesthetics: Stylish, modern, and available in various designs and colours – uPVC allows greater design flexibility

Durable: No pitting, peeling, rotting, drying out, or corroding, and absolute resistance against termites

Structural stability: Galvanized steel reinforcements

Safety and security mechanism: Single or multipoint locking systems

Drainage system: Internal water drain slots, raised track rail, and gradient slope prevent water stagnation

Eco-friendly: Lead-free profiles

White

Wood Finishes

Golden Oak

Dark Oak

Walnut

We’ve got the looks

Our doors and windows come in various elegant shades to complement your home and elevate the aesthetics of your interiors.

Choose the shade that suits you best.

AIS | Windows
uPVC, Wood, Aluminium

Give your Windows a personal touch

At AIS Windows, we offer world-class fittings for enhanced protection and performance of your doors and windows. They are available in a variety of styles – so you can choose what works for you.

- Single and Multipoint Locking
- Handles
- Fly Screens
- Shootbolts & Espags
- Friction Hinges
- Other Accessories: Sill, Wall Connector, Aluminium Rails, Hurricane Bar, and Architectural Trim

Casement

Tilt & Turn

Sliding

Sliding & Folding

Top Hung

There are many ways to open up

Get the absolute freedom to customize your doors and windows to your liking, with different shapes, sizes, and styles of profiles such as:

- Casement windows
- Tilt & turn windows
- Sliding windows
- Sliding & folding windows
- Top hung windows
- Lift & slide windows
- Arched windows
- Combination windows
- Specialty windows

AIS | Windows

uPVC, Wood, Aluminium

Excellent service always delivered

Our comprehensive product offering is complemented by an expert service proposition. From site survey, design consultation, customization, and installation – to post-installation support, our trained professionals are with you every step of the way.

AIS Windows showcase

A look at some of our completed projects.

AIS | Windows

uPVC, Wood, Aluminium

Get in touch with us.
No matter what your door and window needs are, our team of expert technicians are here to help. We have several years of experience delivering exceptional service at quick turnarounds, so that you can bring to life the home of your dreams.

Corporate Office
AIS Glass Solutions Ltd.
209–210, Tribhuwan Complex, Ishwar Nagar,
Mathura Road, New Delhi – 110 065.

Toll-free No: 1800 1034 805

www.aisvue.com

AIS | **Windows**
uPVC, Wood, Aluminium

To experience glass like never before, download the **AIS world of glass** app now!

Follow Us
/AsahiIndiaGlassLtd /AsahiIndia
/company/asahi-india-glass-limited